KōYō

KOYO

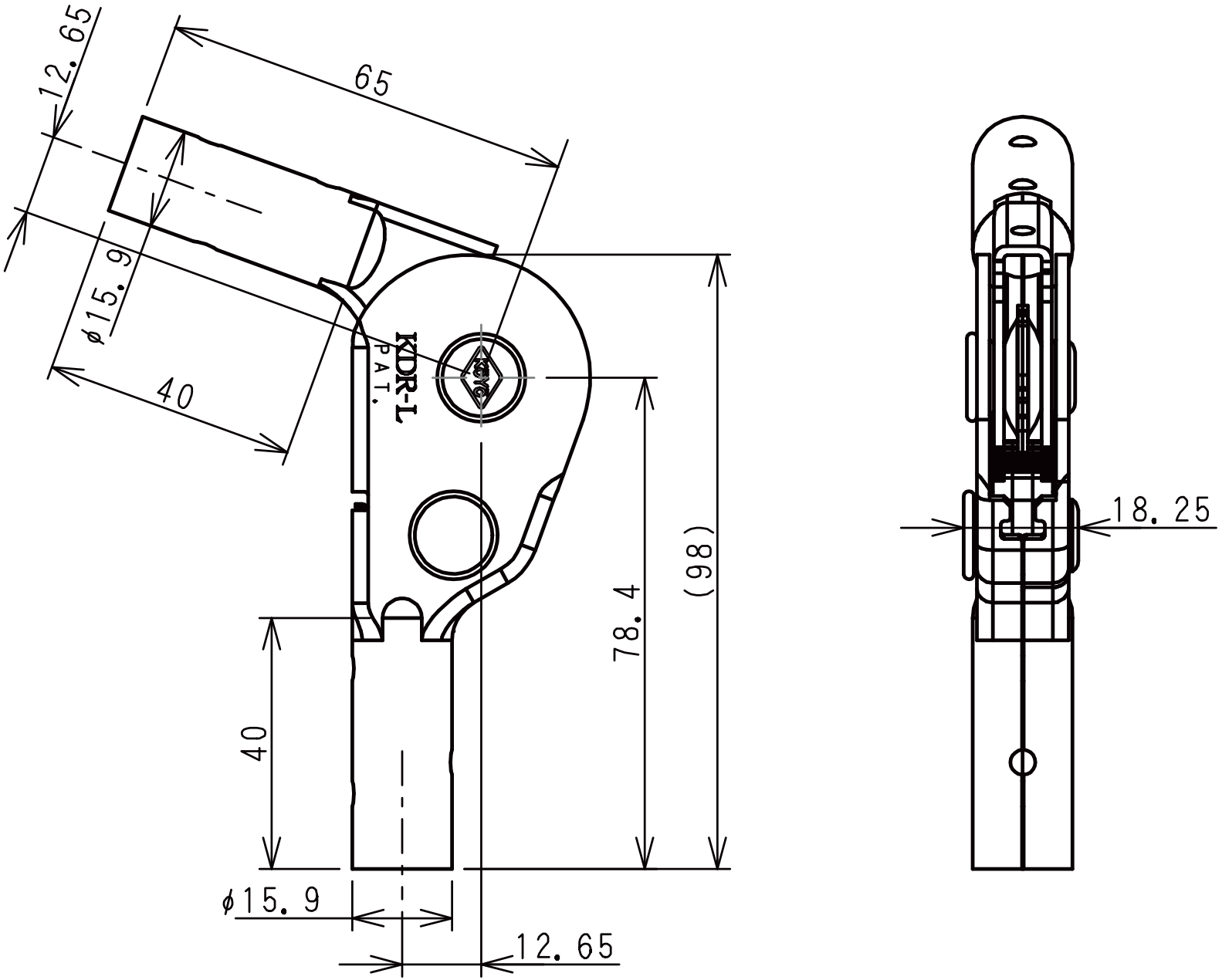
12.65
65
φ15.9
40
KDR-L
PAT.
78.4
(98)
40
φ15.9
12.65
18.25

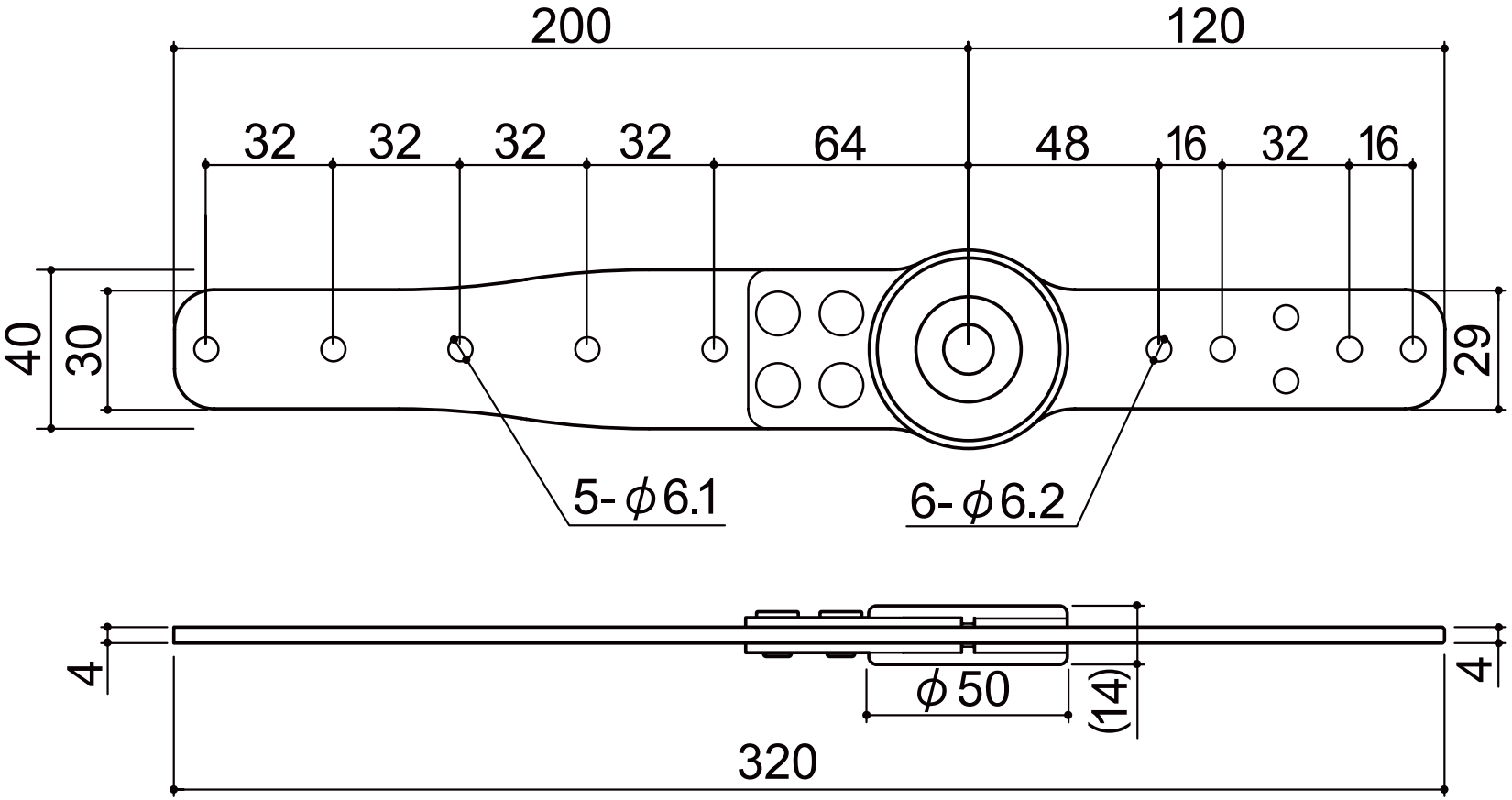
200
120
32
32
32
32
64
48
16
32
16
40
30
29
5-φ6.1
6-φ6.2
4
4
φ50
(14)
320

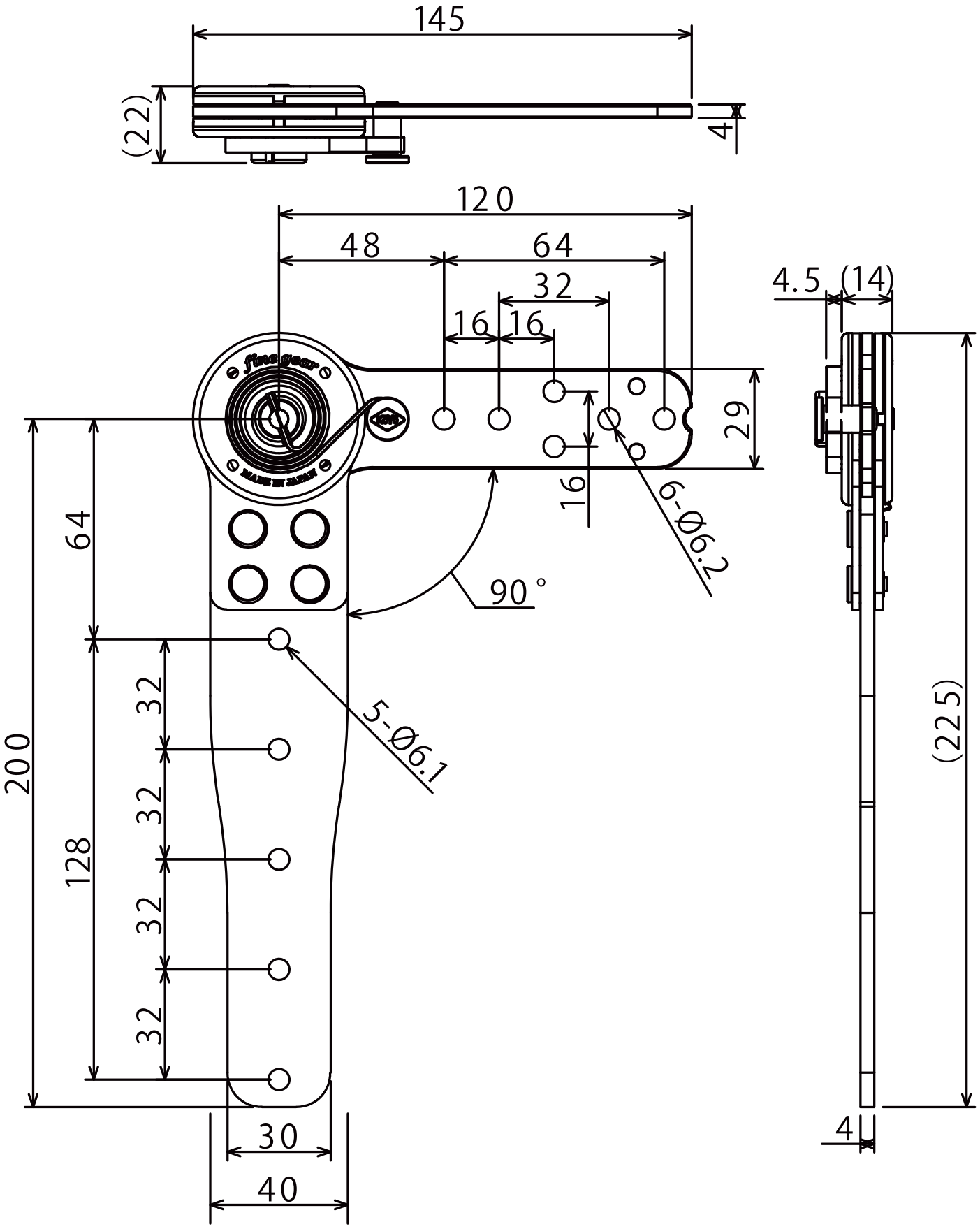
145
(22)
4
120
48
64
32
16
16
4.5
(14)
29
16
6-Ø6.2
90°
64
32
32
32
32
200
128
5-Ø6.1
(225)
4
30
40
fine gear
MADE IN JAPAN

KDR-1
KOVO

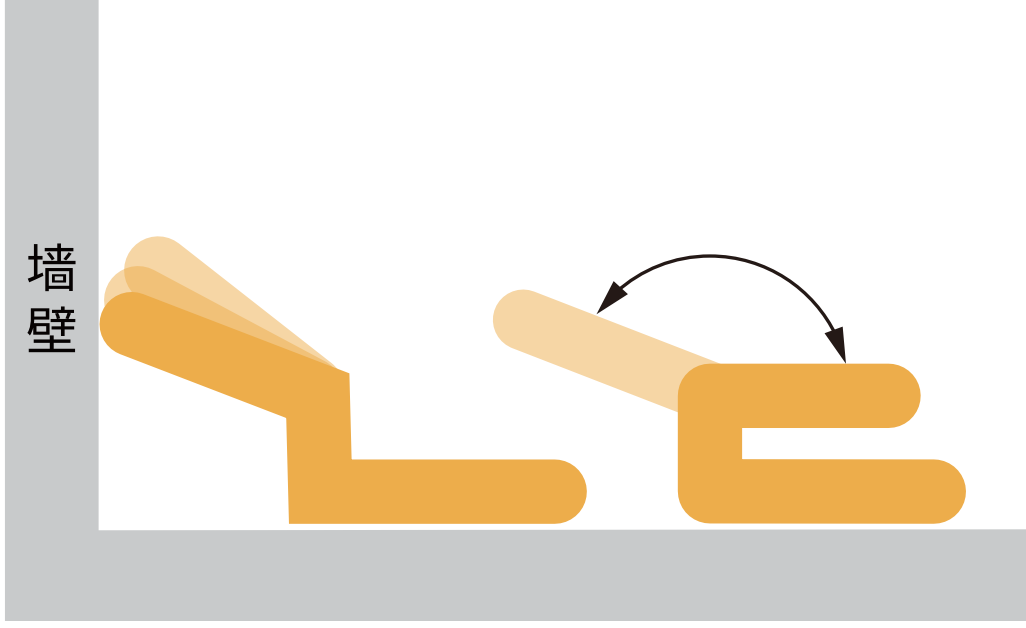
墻壁

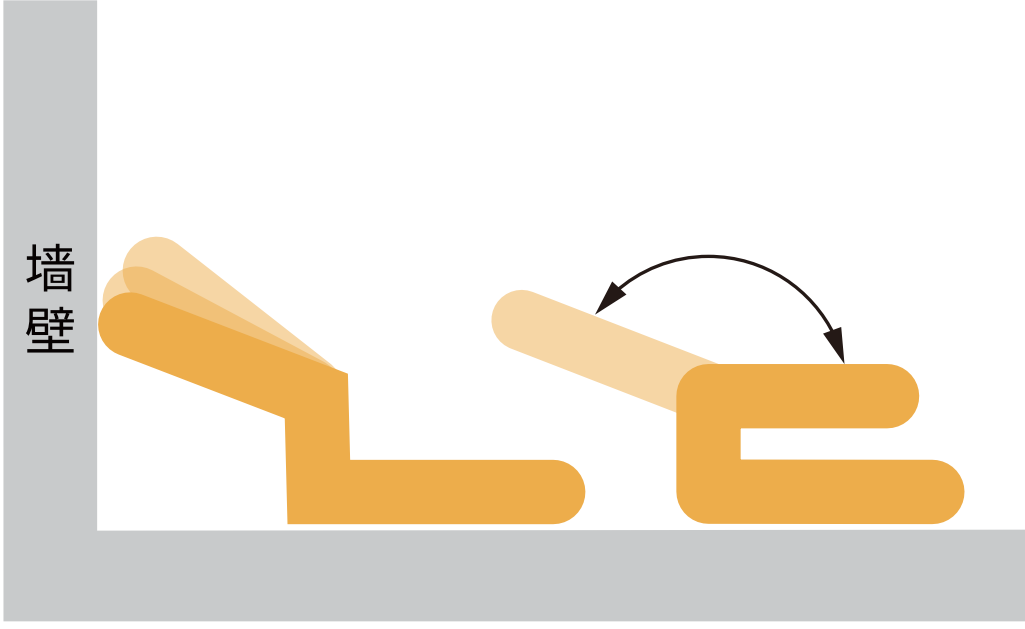
墻
壁

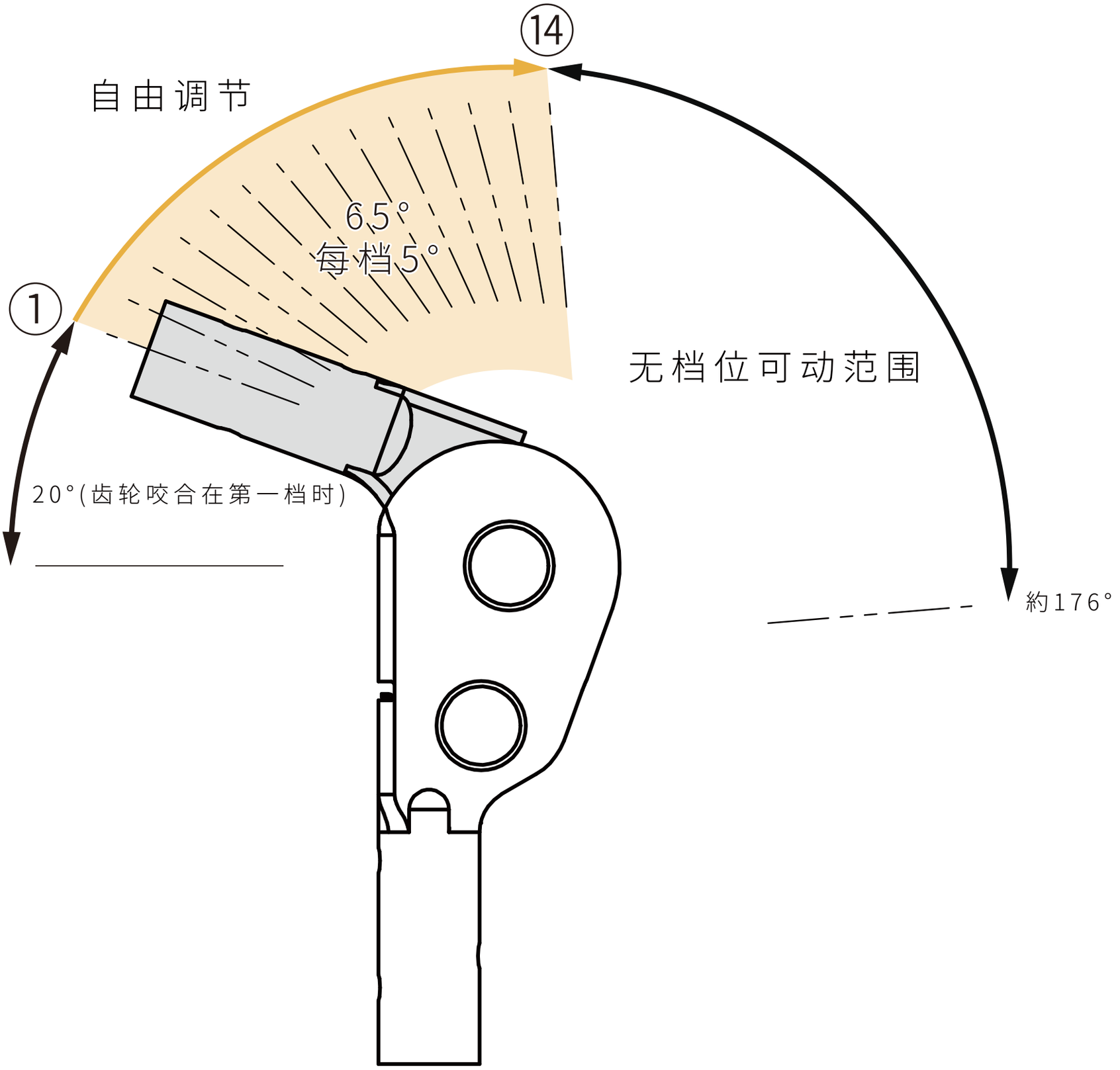
⑭
自由调节
65°
每档5°
①
无档位可动范围
20°(齿轮咬合在第一档时)
約176°

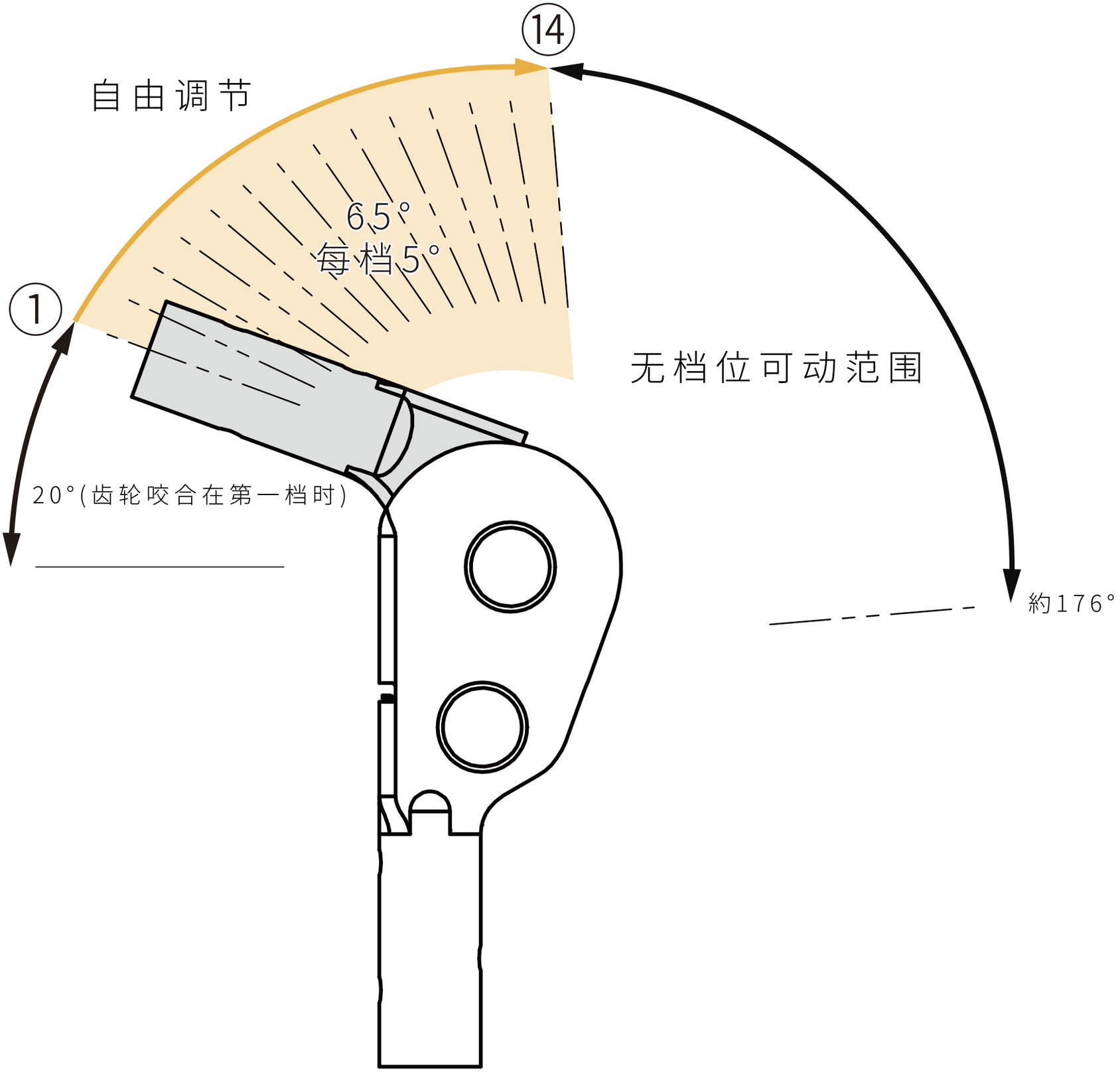
⑭
自由调节
65°
每档5°
①
无档位可动范围
20°(齿轮咬合在第一档时)
约176°

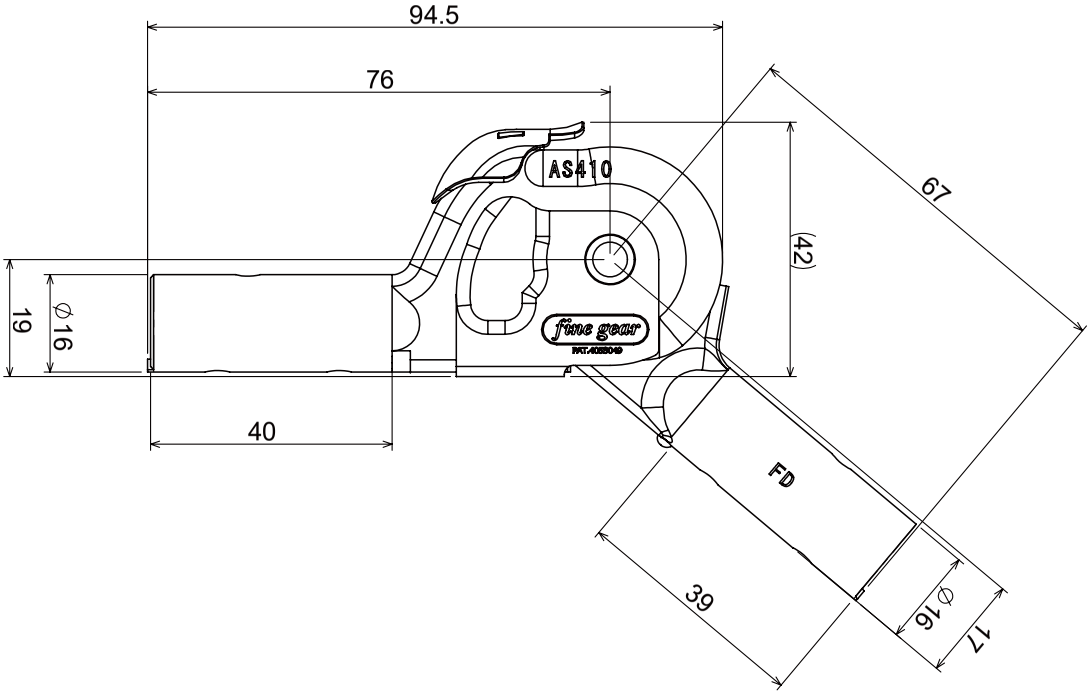
94.5
76
AS410
67
(42)
19
φ16
fine gear
PAT.4282040
40
FD
39
φ16
17

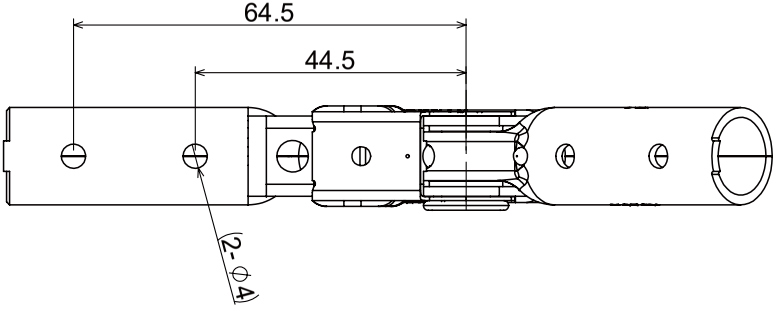
64.5
44.5
(2-φ4)

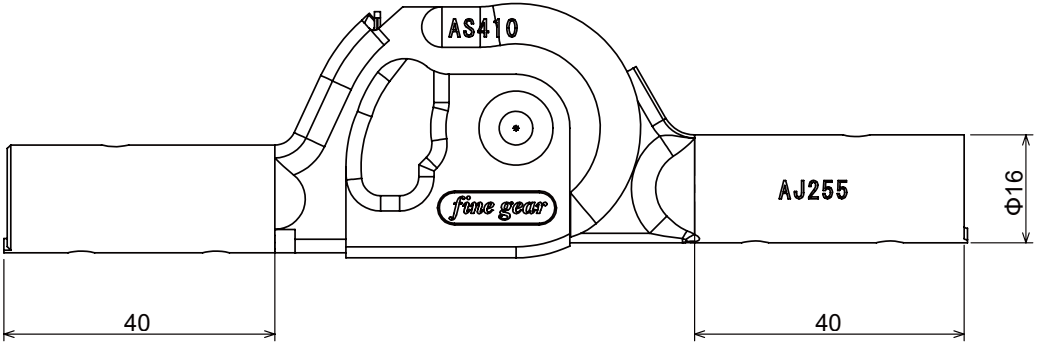
AS410
fine gear
AJ255
Φ16
40
40

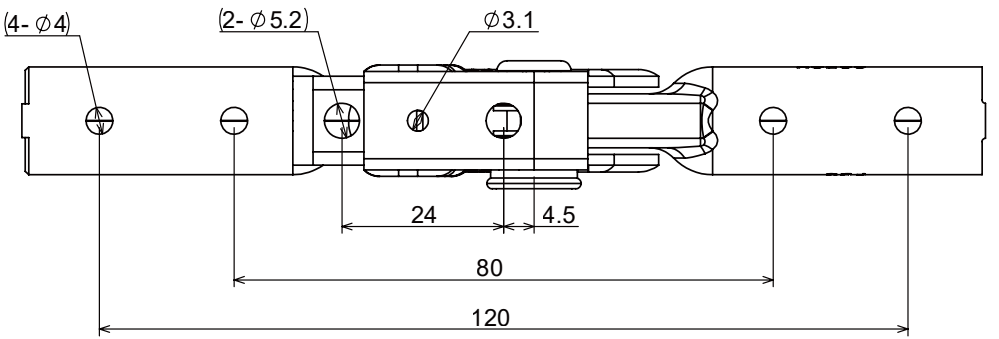
(4- ∅4)
(2- ∅5.2)
∅3.1
24
4.5
80
120

AS25X
fine gear
KOYO
KS-12SE

KS12SE
FDS
KoYo
KS12
MADE IN JAPAN
PAT.4053049

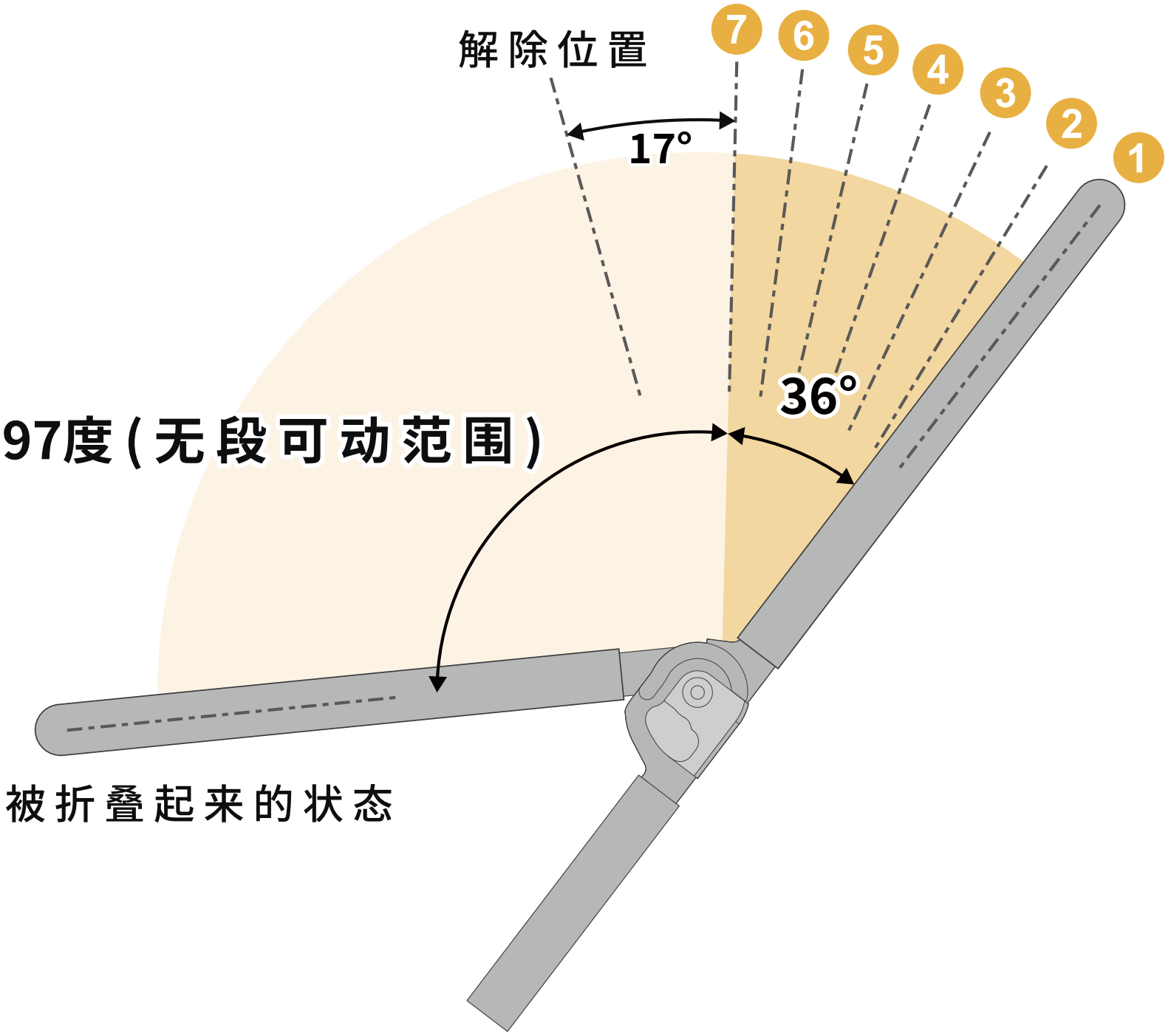
解除位置
7
6
5
4
3
2
1
17°
36°
97度(无段可动范围)
被折叠起来的状态

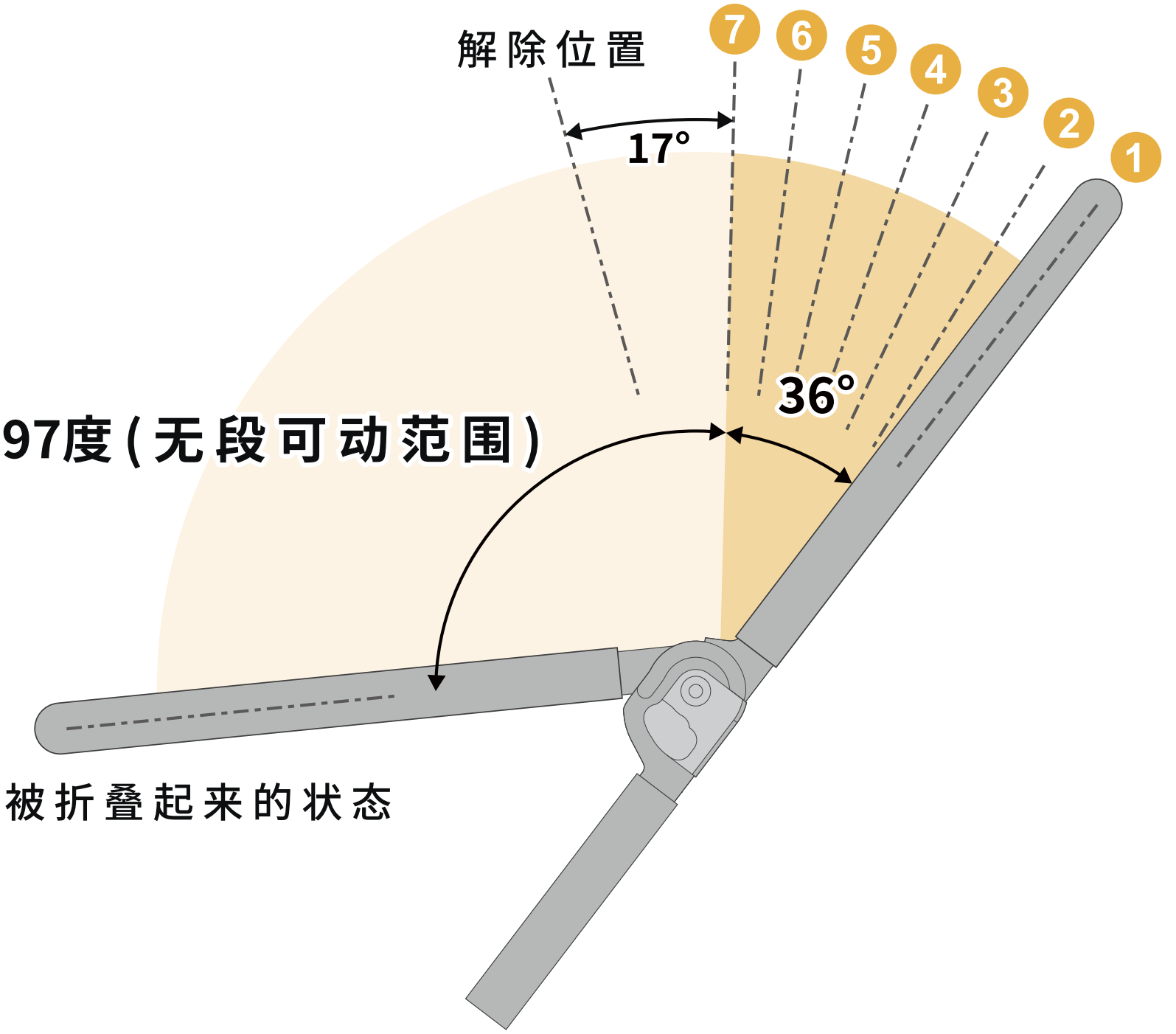
解除位置
7
6
5
4
3
2
1
17°
36°
97度(无段可动范围)
被折叠起来的状态

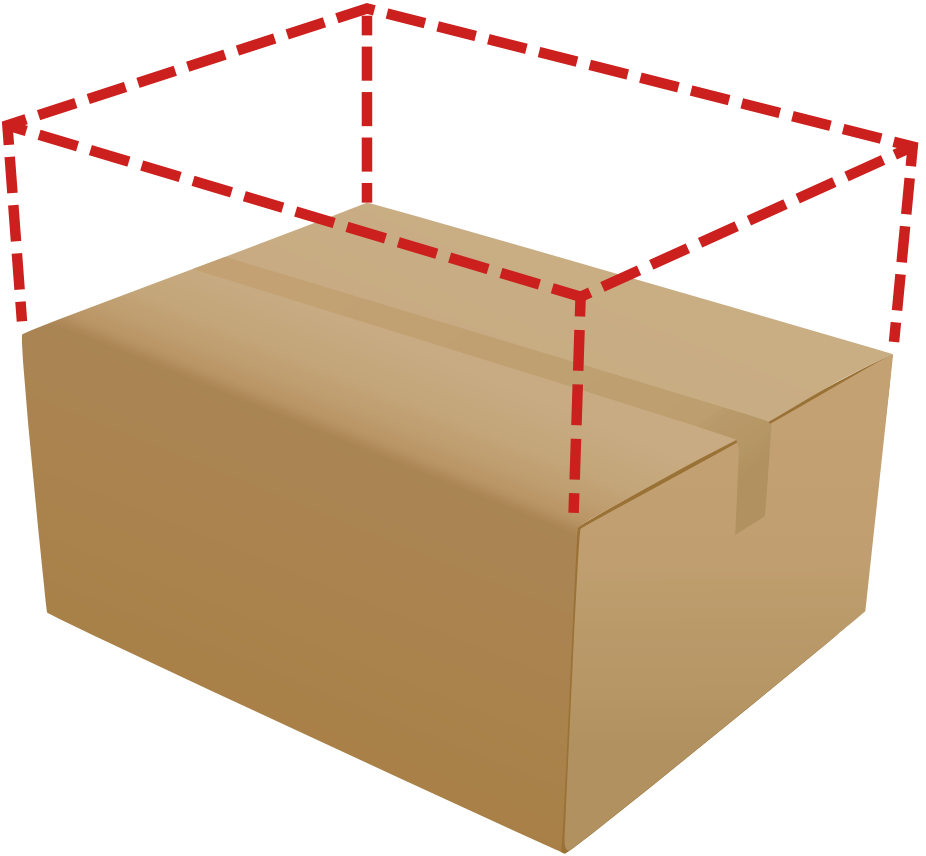

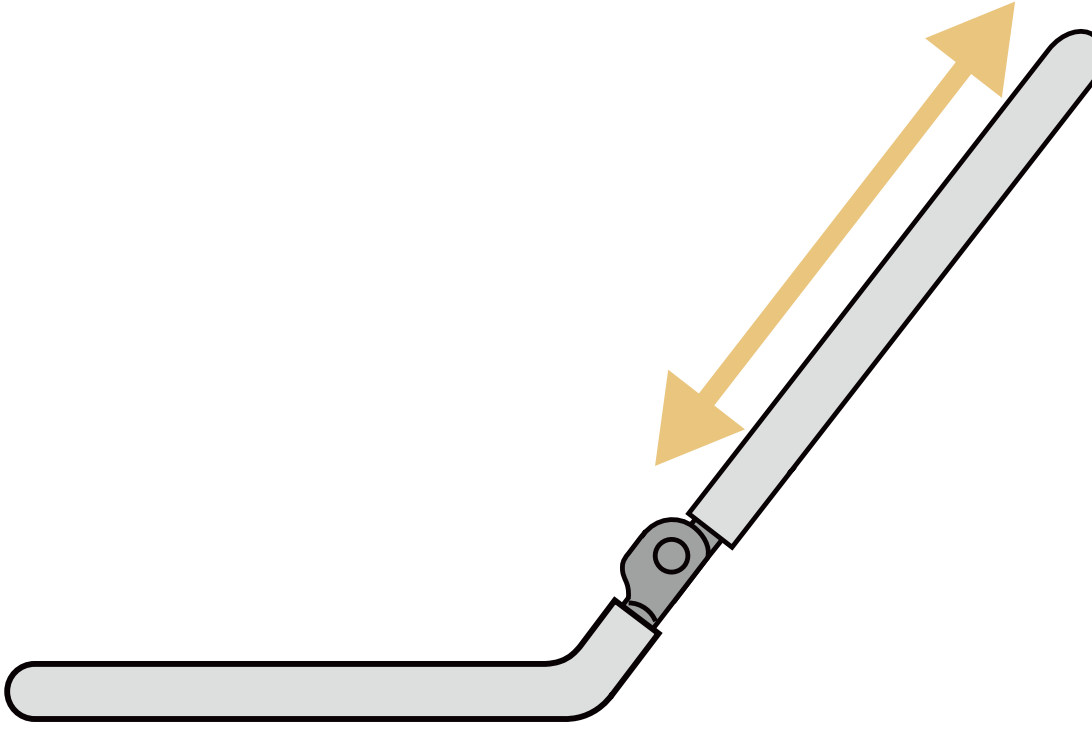

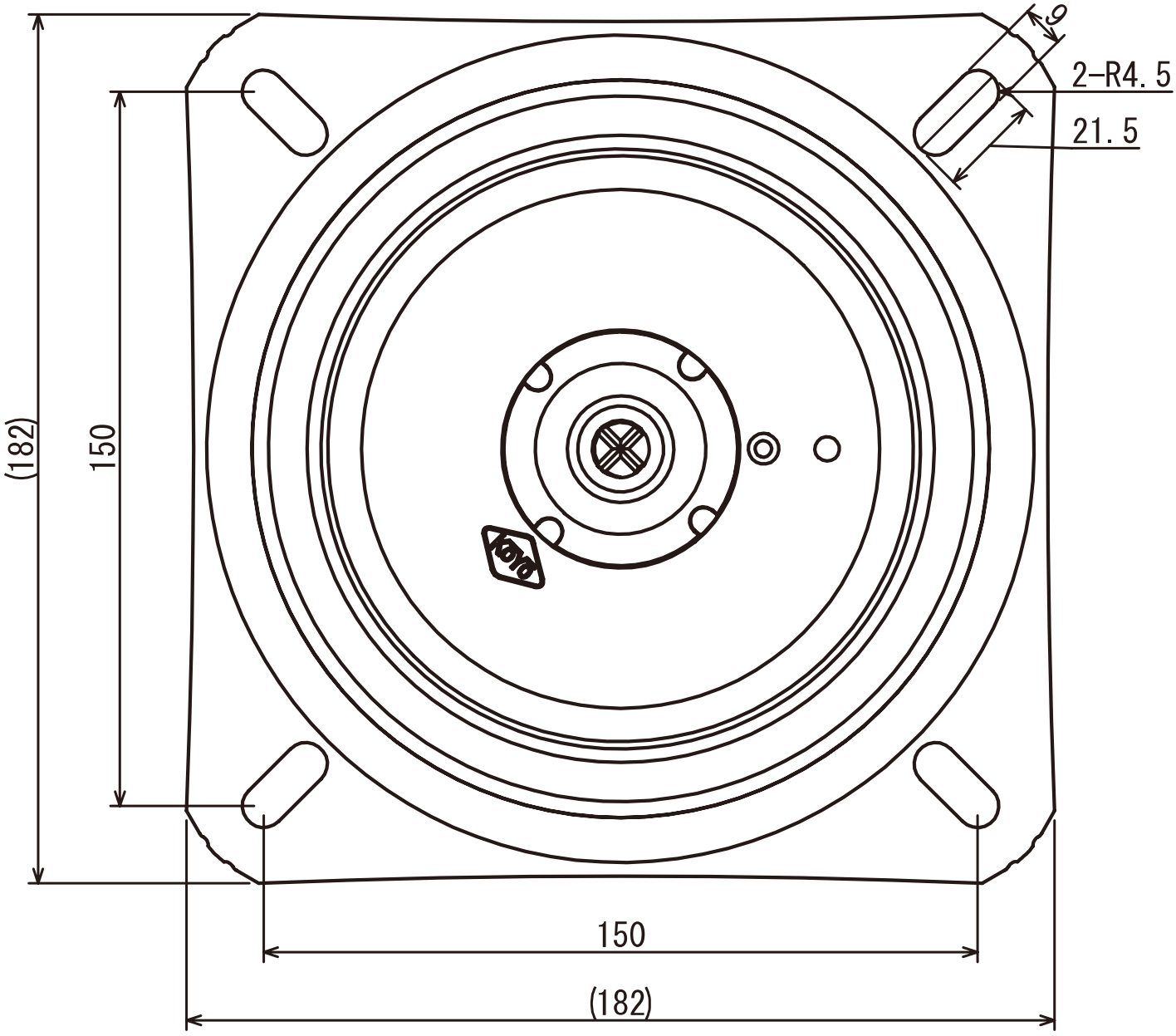
9
2-R4.5
21.5
(182)
150
150
(182)

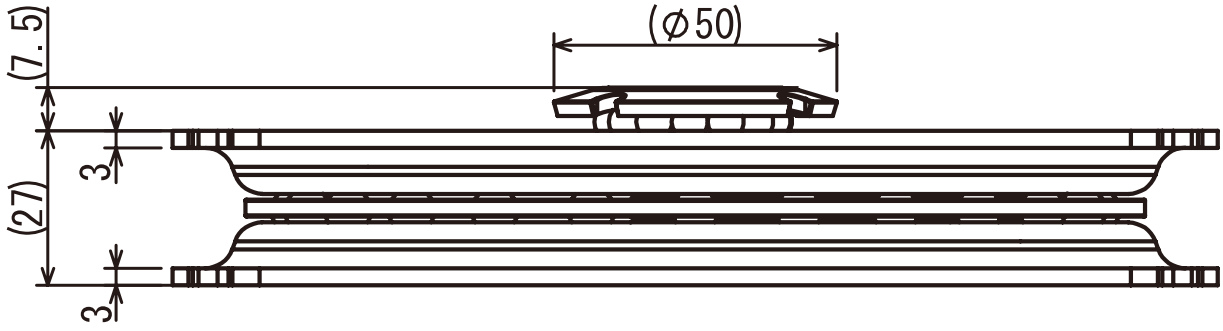
(7.5)
(Φ50)
3
(27)
3

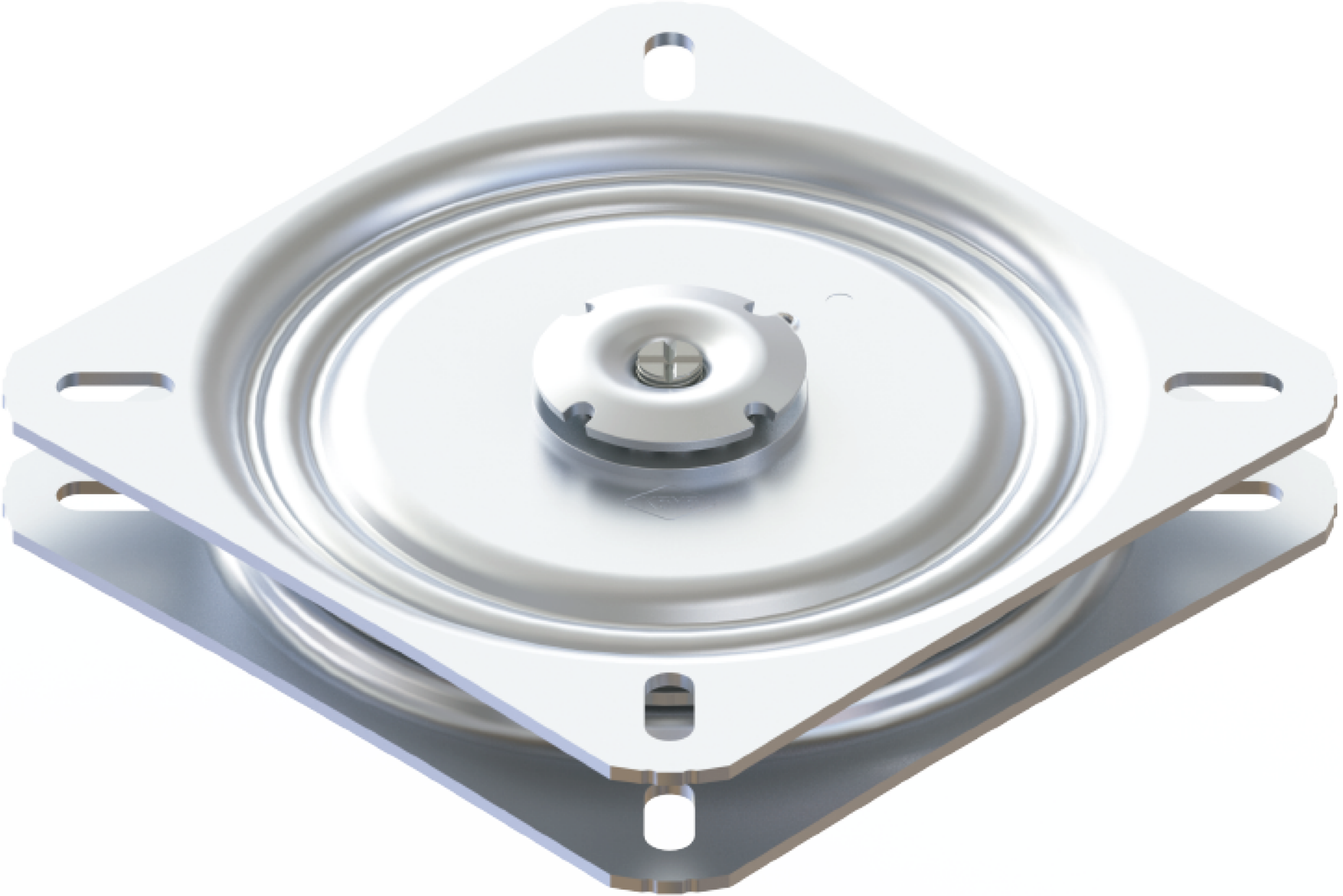

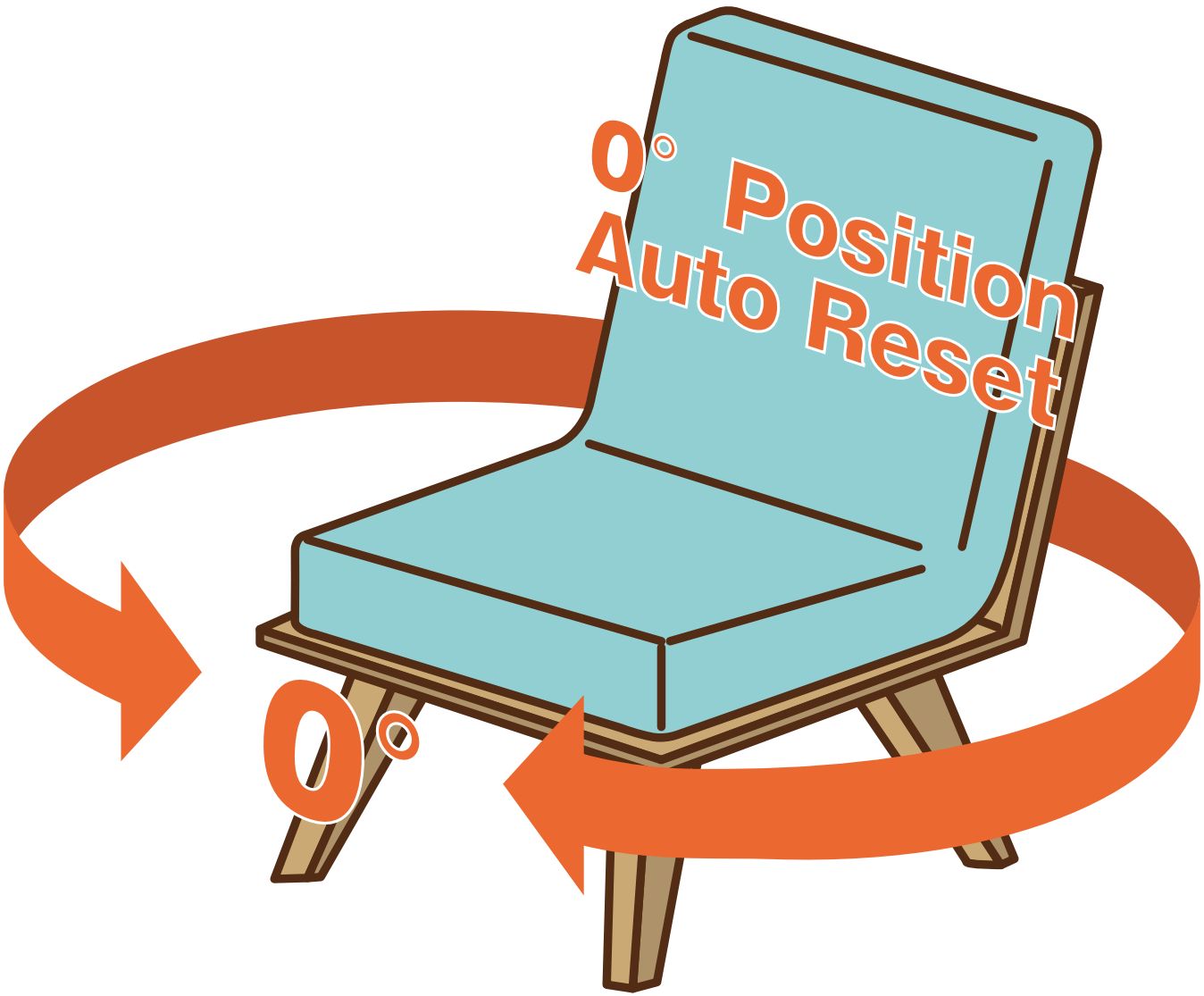
0°
Position
Auto Reset
0°

Left & Right
360°

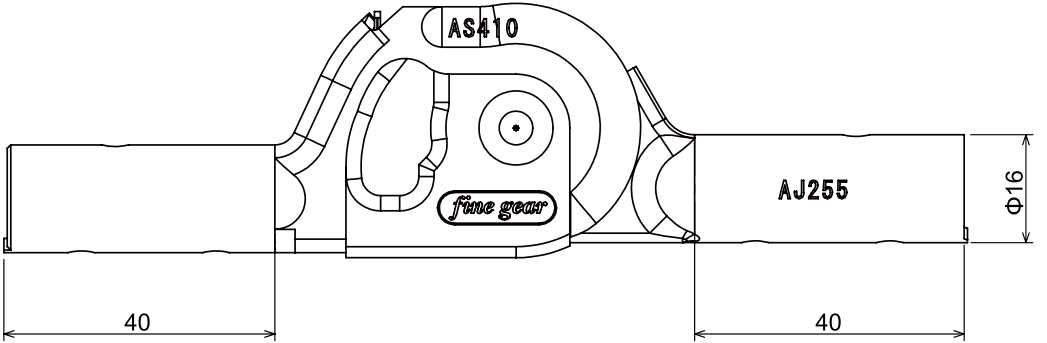
AS410
fine gear
AJ255
Φ16
40
40

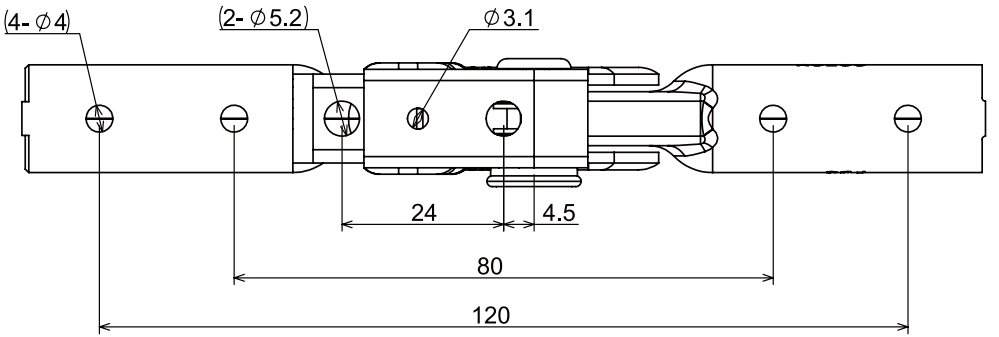
(4- ∅4)
(2- ∅5.2)
∅3.1
24
4.5
80
120

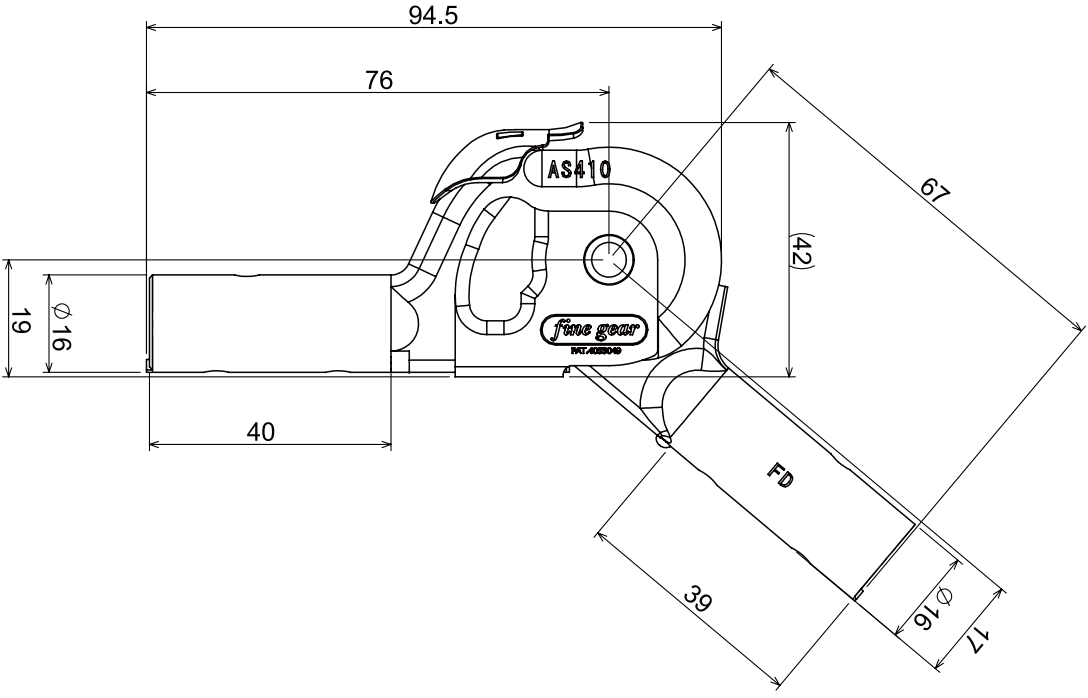
94.5
76
AS410
67
(42)
19
φ16
fine gear
PAT.4355040
40
FD
39
φ16
17

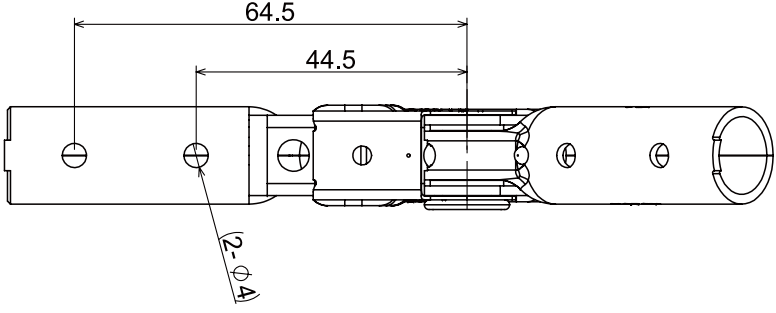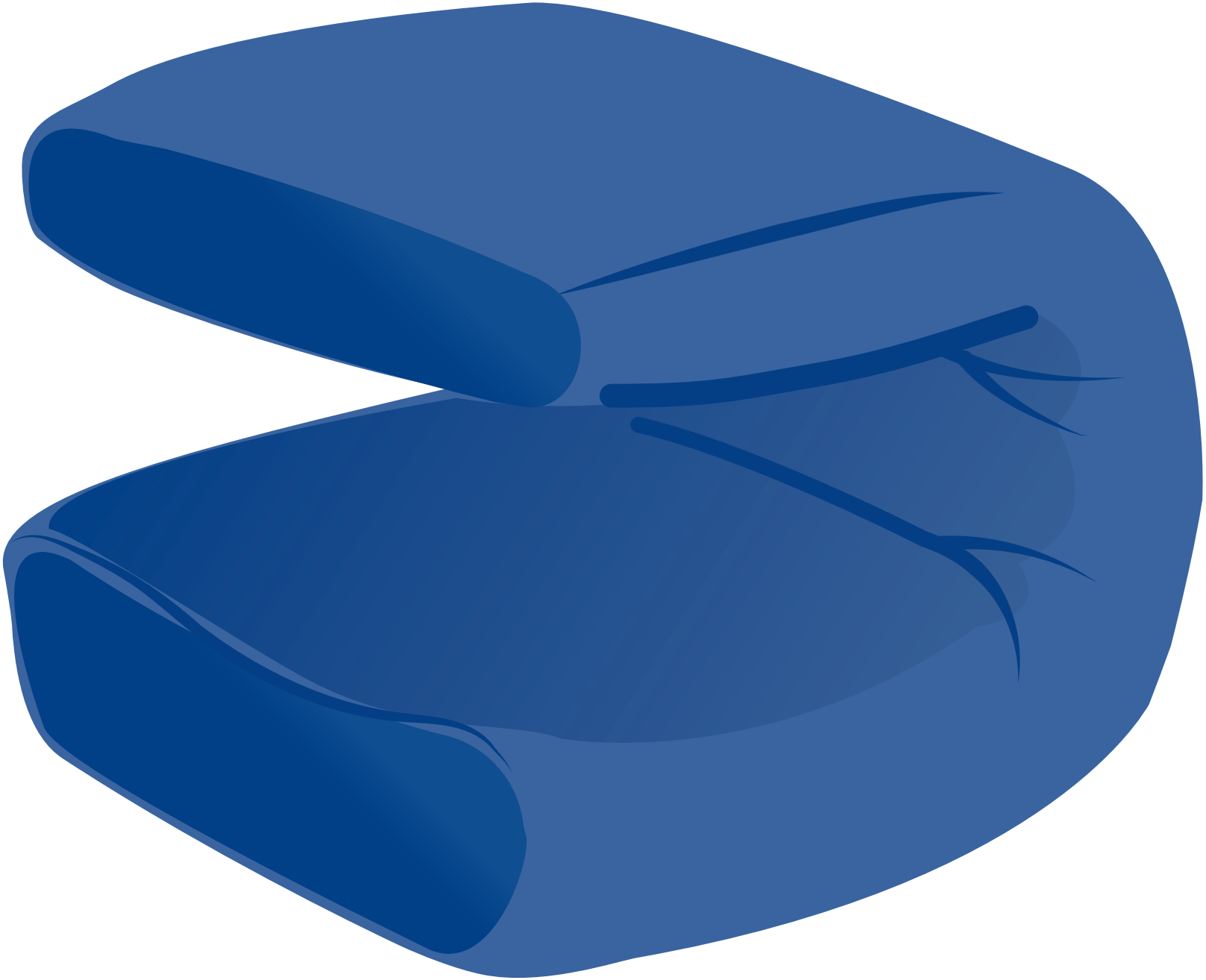
64.5
44.5
(2-φ4)